Copyright@ FÖGE ELEKTRONIK GmbH, 2015, all rights reserved. This drawing is the property of FÖGE ELEKTRONIK GmbH and may not be reproduced in my from, either in whole or in part, or made available to any third party or used for manufacturing or any other purpose without the prior written permission of FÖGE ELEKTRONIK GmbH.

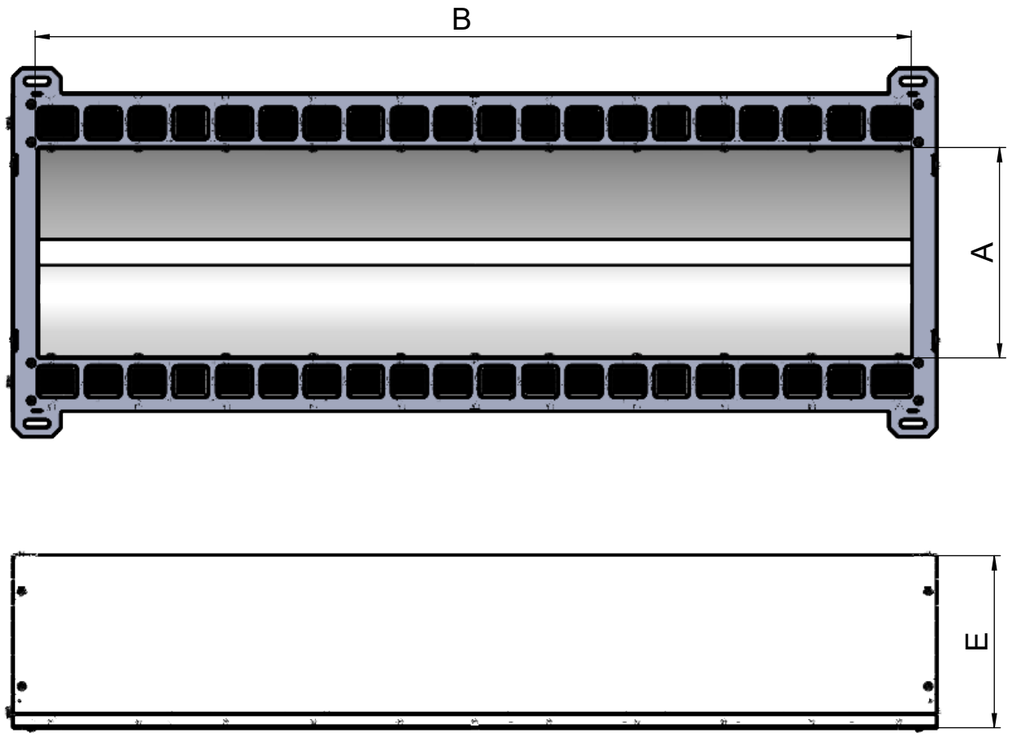

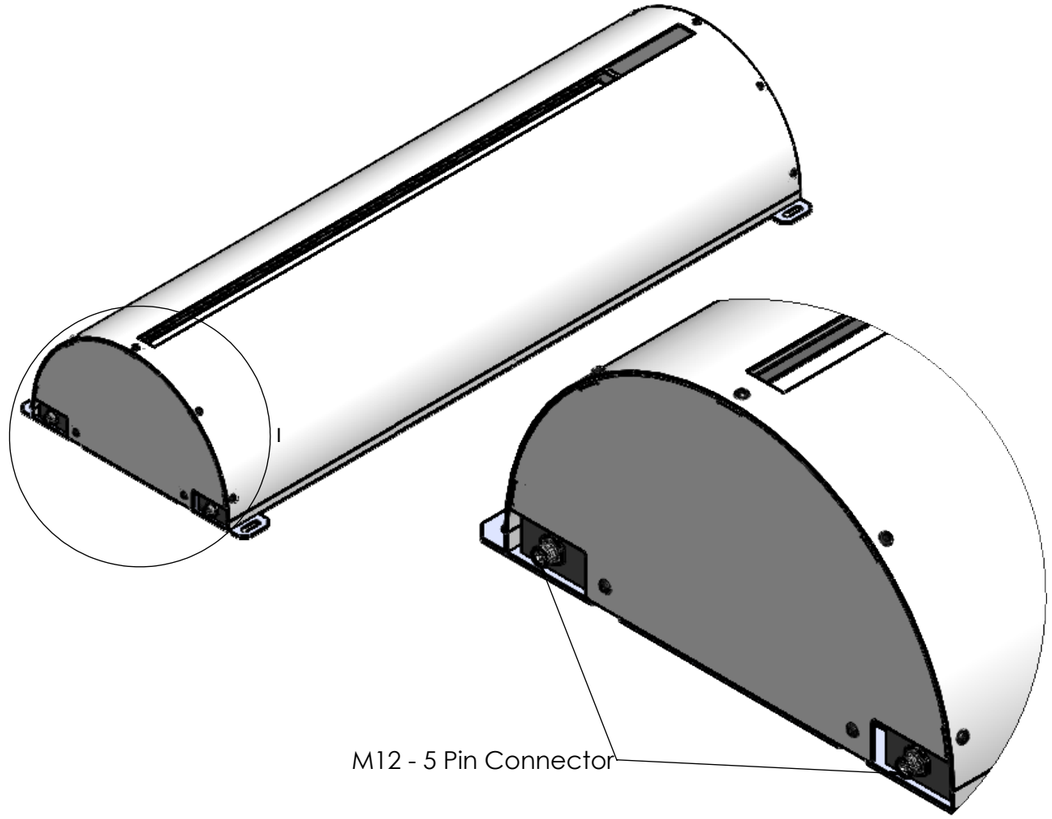

DETAY I

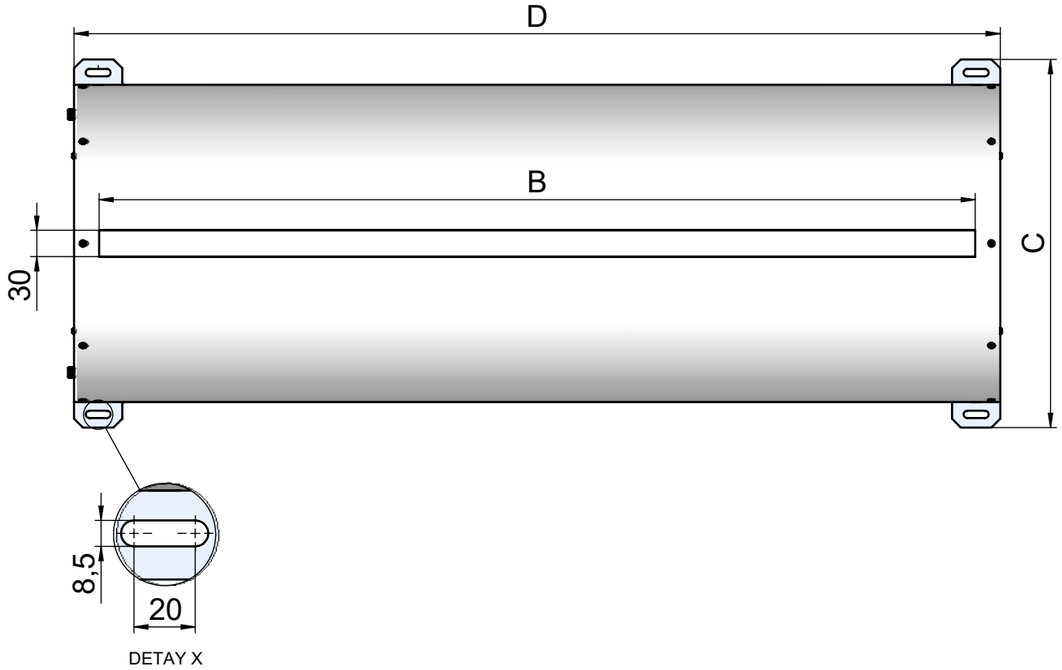

DETAY X

Model	A(mm)	B(mm)	C(mm)	D(mm)	E(mm)
VL-TNL-200-250-X-24-C30	200	250	320	307	147
VL-TNL-200-500-X-24-C30	200	500	320	557	147
VL-TNL-200-750-X-24-C30	200	750	320	807	147
VL-TNL-200-1000-X-24-C30	200	1000	320	1057	147
VL-TNL-300-250-X-24-C30	300	250	420	307	197
VL-TNL-300-500-X-24-C30	300	500	420	557	197
VL-TNL-300-750-X-24-C30	300	750	420	807	197
VL-TNL-300-1000-X-24-C30	300	1000	420	1057	197
VL-TNL-400-250-X-24-C30	400	250	520	307	247
VL-TNL-400-500-X-24-C30	400	500	520	557	247
VL-TNL-400-750-X-24-C30	400	750	520	807	247
VL-TNL-400-1000-X-24-C30	400	1000	520	1057	247

Rev. Nm.	Rev. Date	Description	Checked	Approved
4				
3				
2				
1				

DIN ISO 2768

Tolerance Class	Linear Dimensions >0,5 <3	>3 <6	>6 <30	>30 <120	>120 <400	>400 <1000	>1000 <2000	>2000 <4000	Radius, Chamfer Dimensions >0,5 <3	>3 <6	>6 <30	Angular Dimensions <10	>10 <50	>50 <120	>120 <400	400<
f(fine)	±0,05	±0,05	±0,1	±0,15	±0,2	±0,3	±0,5	-	±0,2	±0,5	±1	±1°	±0°30'	±0°20'	±0°10'	±0°5'
m(coarse)	±0,1	±0,1	±0,2	±0,3	±0,5	±0,8	±1,2	±2								

*Without tolerance indication, LINEAR and ANGULAR DIMENSIONS for DIN 2768-T1 Class:m/f FORM and POSITION TOLERANCES are according DIN 2768-T2 Class:m/f Standards.
**Indication: Machining Parts f Class / Constructive Parts m Class.

Size A4

	Name	Sign	Date	Weight
Created	F.M.KILIÇASLAN		16.06.2023	Net: -
Checked	F.M.KILIÇASLAN		16.06.2023	Gross: -
Approved	F.ÖZKAYA		16.06.2023	Quantity 1

Material: - | Surface Treatment: -

Sheet 1-1 | Product Name: VL-TNL Tunnel Light for Special Applications

Scale 1:1 | Product Number: VL-TNL-XXX-XXXX-X-24-C30

Copyright reserved. Do not scale on this drawing

FÖGE ELEKTRONIK GmbH

Projection