Copright@ FÖGE ELEKTRONIK GmbH, 2015, all rights reserved. This drawing is the property of FÖGE ELEKTRONIK GmbH and may not be reproduced in my from, either in whole or in part, or made available to any third party or used for manufacturing or any other purpose without the prior written permission of FÖGE ELEKTRONIK GmbH.

Copright@ FÖGE ELEKTRONIK GmbH, 2015, all rights reserved. This drawing is the property of FÖGE ELEKTRONIK GmbH and may not be reproduced in my from, either in whole or in part, or made available to any third party or used for manufacturing or any other purpose without the prior written permission of FÖGE ELEKTRONIK GmbH.

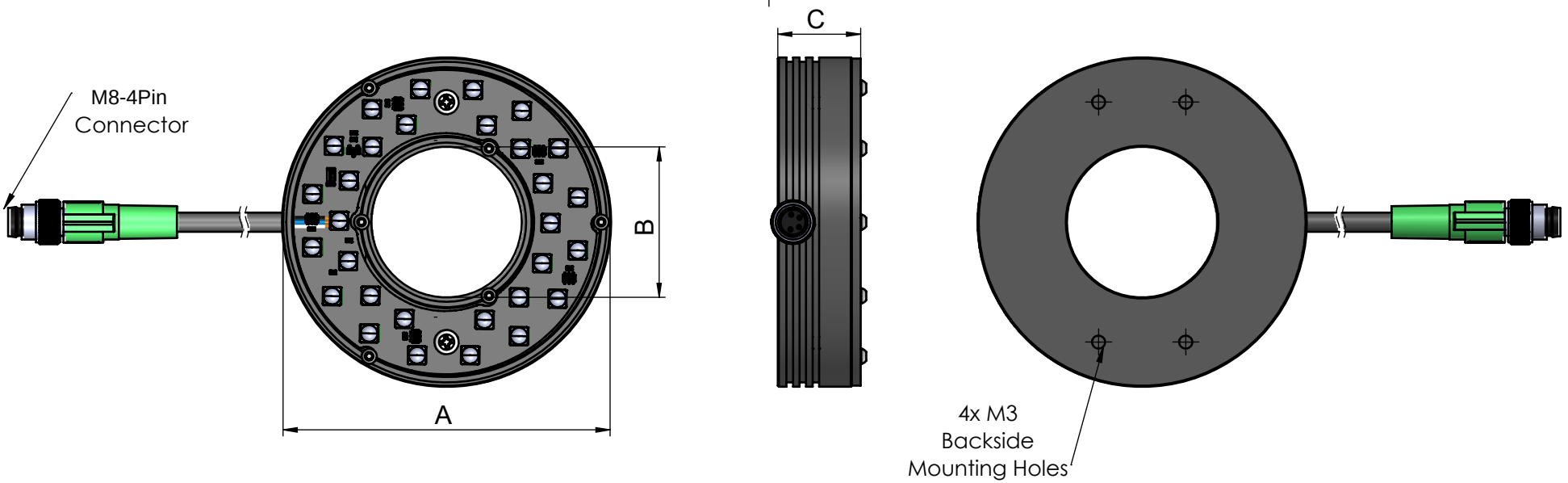

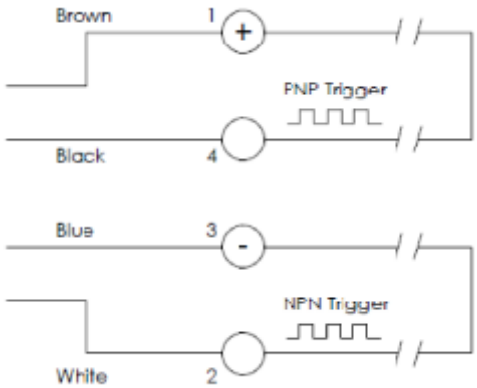

Pins	Function	Wire Color
1	Power In +24 VDC	Brown
2	NPN	White
3	GND	Blue
4	PNP	Black

Model	A(mm)	B(mm)	C(mm)
VL-RGF-51-30-X-24-C30	56,5	26,5	19
VL-RGF-70-38-X-24-C30	75	34,5	19
VL-RGF-100-45-X-24-C30	105,5	41	19

Rev. Nm.	Rev. Date	Description	Checked	Approved
4				
3				
2				
1				

DIN ISO 2768	Linear Dimensios								Radius, Chamfer Dimensions			Angular Dimensions				
Tolerance Class	>0,5 <3	>3 <6	>6 <30	>30 <120	>120 <400	>400 <1000	>1000 <2000	>2000 <4000	>0,5 <3	>3 <6	>6 <30	<10	>10 <50	>50 <120	>120 <400	400<
f(fine)	±0,05	±0,05	±0,1	±0,15	±0,2	±0,3	±0,5	-	±0,2	±0,5	±1	±1°	±0°30'	±0°20'	±0°10'	±0°5'
m(coarse)	±0,1	±0,1	±0,2	±0,3	±0,5	±0,8	±1,2	±2								

*Without tolerance indication, LINEAR and ANGULAR DIMENSIONS for DIN 2768-T1 Class:m/f FORM and POSITION TOLERANCES are according DIN 2768-T2 Class:m/f Standards.
**Indication: Machining Parts f Class / Constructive Parts m Class.

Size A4

	Name	Sign	Date
Created	F.M.KILIÇASLAN		06.04.2023
Checked	F.M.KILIÇASLAN		06.04.2023
Approved	F.M.KILIÇASLAN		06.04.2023

Copyright reserved. Do not scale on this drawing

FÖGE ELEKTRONIK GmbH

Weight	Material	Surface Treatment
Net: -	-	-
Gross: -		
Quantity: 1		
Projection		

Sheet	Product Name
1-1	VL-RGF Direct Ring Light
Scale 1:1	Product Number: VL-RGF-XXX-XXX-X-24-C30