Copyright@ FÖGE ELEKTRONIK GmbH, 2015, all rights reserved. This drawing is the property of FÖGE ELEKTRONIK GmbH and may not be reproduced in my from, either in whole or in part, or made available to any third party or used for manufacturing or any other purpose without the prior written permission of FÖGE ELEKTRONIK GmbH.

Copyright@ FÖGE ELEKTRONIK GmbH, 2015, all rights reserved. This drawing is the property of FÖGE ELEKTRONIK GmbH and may not be reproduced in my from, either in whole or in part, or made available to any third party or used for manufacturing or any other purpose without the prior written permission of FÖGE ELEKTRONIK GmbH.

Model	A(mm)	B(mm)	C(mm)	D(mm)	E(mm)	F(mm)
VL-FLD-300-300-W-24-C30	300	300	352	385	21	55
VL-FLD-400-400-W-24-C30	400	400	452	485	21	55
VL-FLD-500-500-W-24-C30	500	500	552	585	21	78
VL-FLD-600-600-W-24-C30	600	600	652	685	21	78
VL-FLD-700-700-W-24-C30	700	700	752	785	21	78
VL-FLD-800-800-W-24-C30	800	800	852	885	21	78
VL-FLD-900-900-W-24-C30	900	900	952	985	21	78
VL-FLD-1000-1000-W-24-C30	1000	1000	1052	1085	21	78

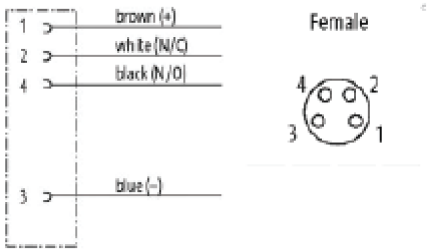

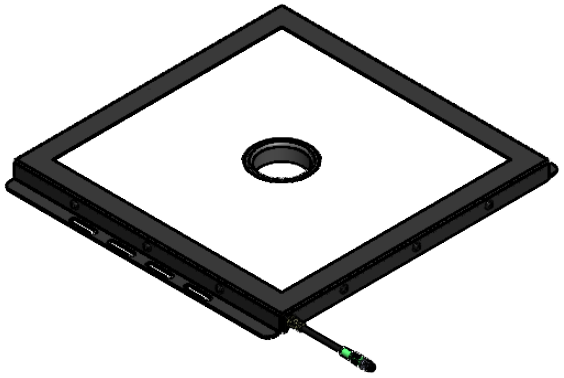

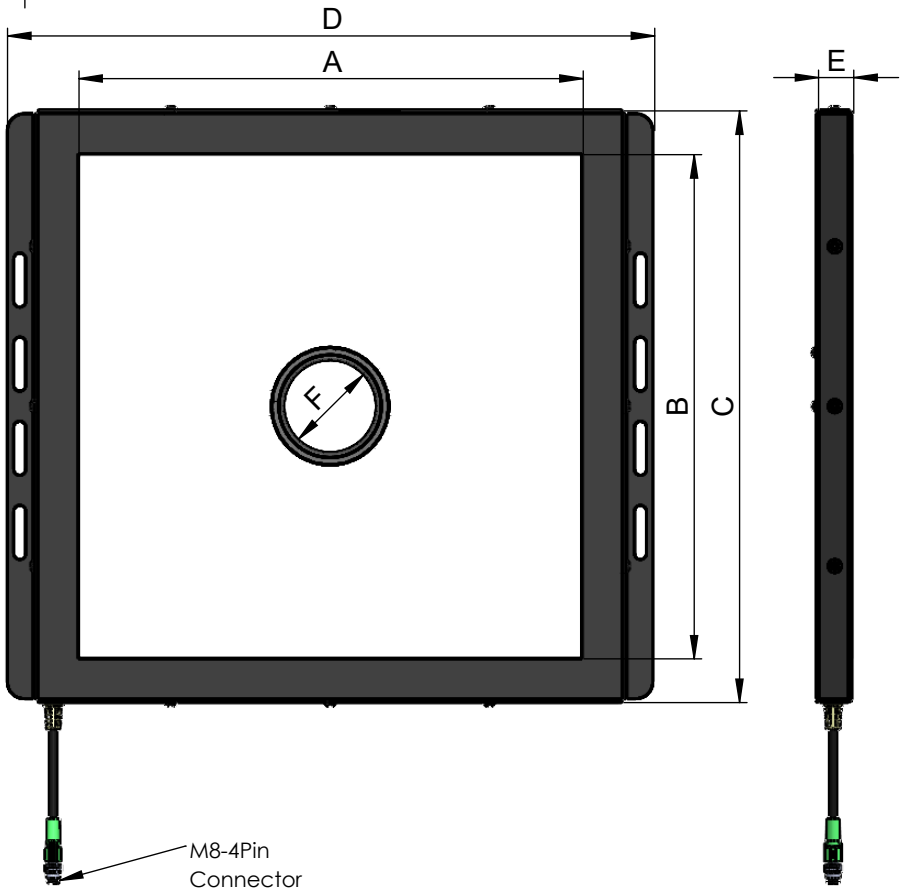

Rev. Nm.	Rev. Date	Description	Checked	Approved
4				
3				
2				
1				

DIN ISO 2768	Linear Dimensios								Radius, Chamfer Dimensions			Angular Dimensions				
Tolerance Class	>0,5 <3	>3 <6	>6 <30	>30 <120	>120 <400	>400 <1000	>1000 <2000	>2000 <4000	>0,5 <3	>3 <6	>6 <30	<10	>10 <50	>50 <120	>120 <400	400<
f(fine)	±0,05	±0,05	±0,1	±0,15	±0,2	±0,3	±0,5	-	±0,2	±0,5	±1	±1°	±0°30'	±0°20'	±0°10'	±0°5'
m(coarse)	±0,1	±0,1	±0,2	±0,3	±0,5	±0,8	±1,2	±2								

*Without tolerance indication, LINEAR and ANGULAR DIMENSIONS for DIN 2768-T1 Class:m/f FORM and POSITION TOLERANCES are according DIN 2768-T2 Class:m/f Standards.
**Indication: Machining Parts f Class / Constructive Parts m Class.

Size A4

	Name	Sign	Date
Created	Y.S.SEZER		24.07.2023
Checked	N.ESEN		24.07.2023
Approved	N.ESEN		24.07.2023

Copyright reserved.
Do not scale on this drawing

Weight	Material	Surface Treatment
Net: -	-	-
Gross: -		
Quantity: 1		

FÖGE ELEKTRONIK GmbH

Projection

Sheet	Product Name	Scale	Product Number
1-1	VL-FLD Large Area Flat Dome Light	1:1	VL-FLD-XXXX-XXXX-W-24-C30