Copyright@ FÖGE ELEKTRONIK GmbH, 2015, all rights reserved. This drawing is the property of FÖGE ELEKTRONIK GmbH and may not be reproduced in my from, either in whole or in part, or made available to any third party or used for manufacturing or any other purpose without the prior written permission of FÖGE ELEKTRONIK GmbH.

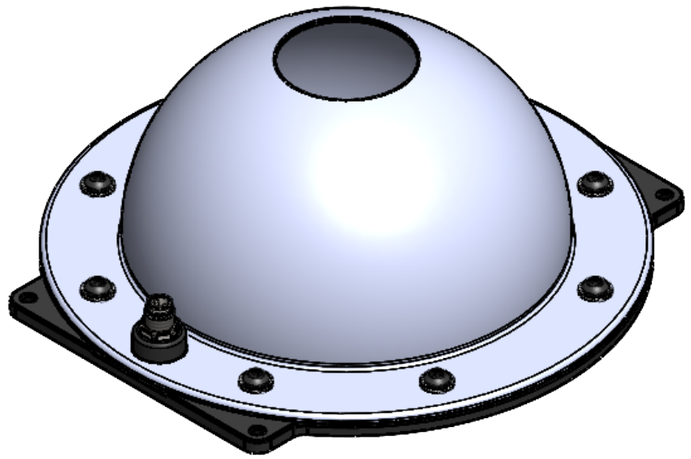

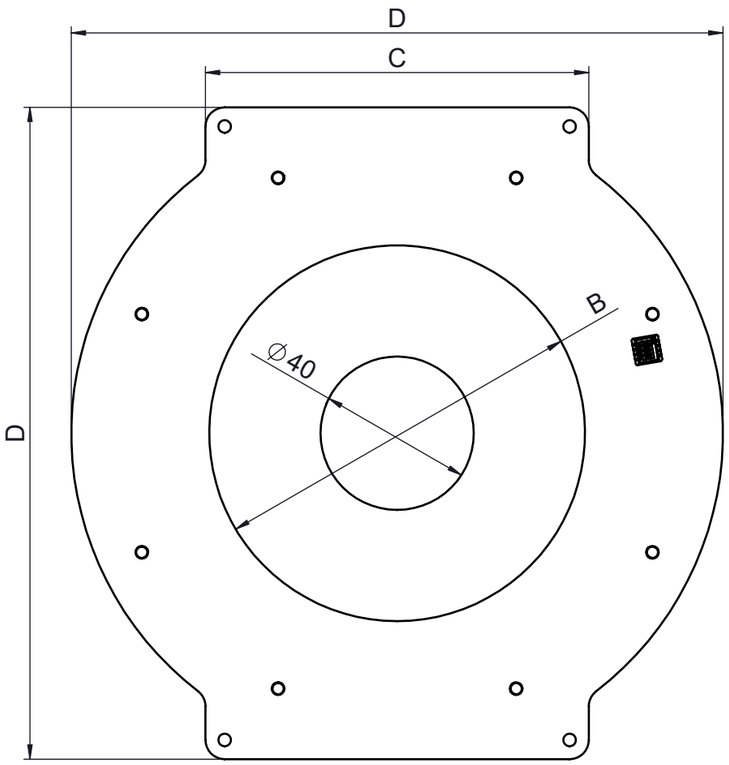


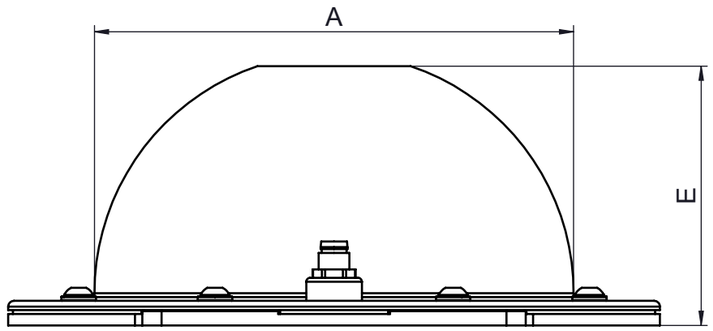


## - CONNECTION

**M8 4 male points**

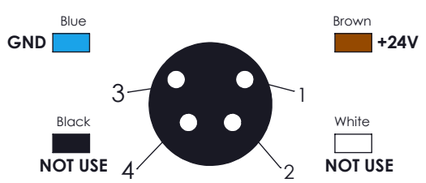


Front View Of The Connector

| Model | A(mm) | B(mm) | C(mm) | D(mm) | E(mm) |
|---|---|---|---|---|---|
| VL-DOM-125-98-X-24-C | 125 | 98 | 100 | 170 | 68 |
| VL-DOM-250-223-X-24-C | 250 | 223 | 150 | 295 | 132 |

| Rev. Nm. | Rev. Date | Description | Checked | Approved |
|---|---|---|---|---|
| 4 | | | | |
| 3 | | | | |
| 2 | | | | |
| 1 | | | | |

| DIN ISO 2768 | Linear Dimensios | | | | | | | | Radius, Chamfer Dimensions | | | Angular Dimensions | | | | |
|---|---|---|---|---|---|---|---|---|---|---|---|---|---|---|---|---|
| Tolerance Class | >0,5 <3 | >3 <6 | >6 <30 | >30 <120 | >120 <400 | >400 <1000 | >1000 <2000 | >2000 <4000 | >0,5 <3 | >3 <6 | >6 <30 | <10 | >10 <50 | >50 <120 | >120 <400 | 400< |
| f(fine) | ±0,05 | ±0,05 | ±0,1 | ±0,15 | ±0,2 | ±0,3 | ±0,5 | - | ±0,2 | ±0,5 | ±1 | ±1° | ±0°30' | ±0°20' | ±0°10' | ±0°5' |
| m(coarse) | ±0,1 | ±0,1 | ±0,2 | ±0,3 | ±0,5 | ±0,8 | ±1,2 | ±2 | | | | | | | | |

*Without tolerance indication, LINEAR and ANGULAR DIMENSIONS for DIN 2768-T1 Class:m/f FORM and POSITION TOLERANCES are according DIN 2768-T2 Class:m/f Standards.
**Indication: Machining Parts f Class / Constructive Parts m Class.

Size A4

| | Name | Sign | Date |
|---|---|---|---|
| Created | F.M.KILIÇASLAN | | 10/11/19 |
| Checked | F.M.KILIÇASLAN | | 10/11/19 |
| Approved | F.M.KILIÇASLAN | | 10/11/19 |

Copyright reserved. Do not scale on this drawing

FÖGE ELEKTRONIK GmbH

| Weight | Material | Surface Treatment |
|---|---|---|
| Net: - | - | - |
| Gross: - | | |
| Quantity: 1 | | |
| Projection | | |

| Sheet | Product Name |
|---|---|
| 1-1 | Dome Light |
| Scale 1:1 | Product Number: VL-DOM-XXX-XXX-X-24-C |