Copyright@ FÖGE ELEKTRONIK GmbH, 2015, all rights reserved. This drawing is the property of FÖGE ELEKTRONIK GmbH and may not be reproduced in my from, either in whole or in part, or made available to any third party or used for manufacturing or any other purpose without the prior written permission of FÖGE ELEKTRONIK GmbH.

Copyright@ FÖGE ELEKTRONIK GmbH, 2015, all rights reserved. This drawing is the property of FÖGE ELEKTRONIK GmbH and may not be reproduced in my from, either in whole or in part, or made available to any third party or used for manufacturing or any other purpose without the prior written permission of FÖGE ELEKTRONIK GmbH.

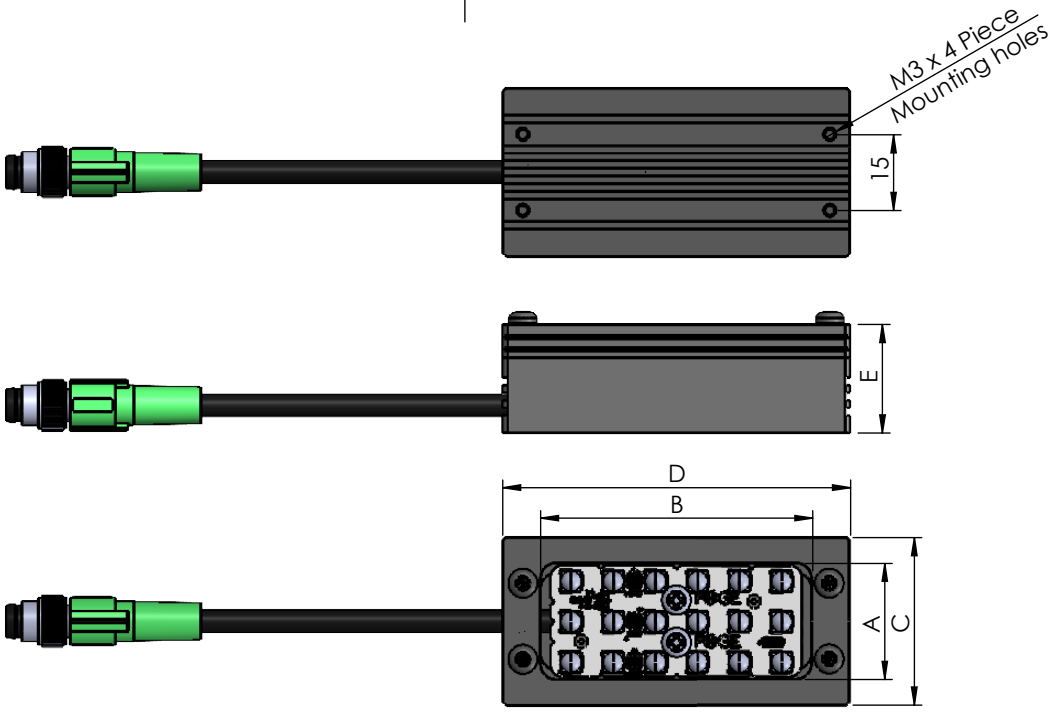

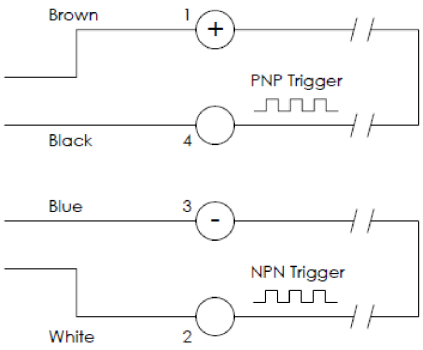

Pins	Function	Wire Color
1	Power In +24 VDC	Brown
2	NPN	White
3	GND	Blue
4	PNP	Black

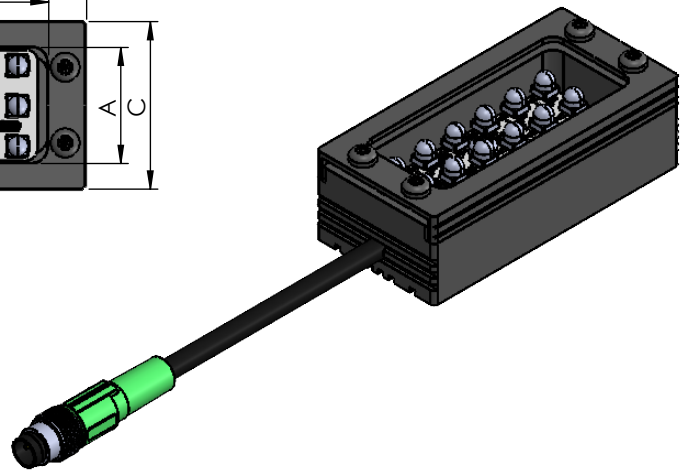

Model	A(mm)	B(mm)	C(mm)	D(mm)	E(mm)
VL-BAR-23-51-X-24-30	23	54	33,2	69	21,5
VL-BAR-23-102-X-24-30	23	104	33,2	121	21,5
VL-BAR-23-203-X-24-30	23	203	33,2	222	21,5
VL-BAR-23-305-X-24-30	23	305	33,2	324	21,5
VL-BAR-23-405-X-24-30	23	405	33,2	424	21,5
VL-BAR-23-505-X-24-30	23	505	33,2	524	21,5

Rev. Nm.	Rev. Date	Description	Checked	Approved
4				
3				
2				
1				

DIN ISO 2768	Linear Dimensios								Radius, Chamfer Dimensions			Angular Dimensions				
Tolerance Class	>0,5 <3	>3 <6	>6 <30	>30 <120	>120 <400	>400 <1000	>1000 <2000	>2000 <4000	>0,5 <3	>3 <6	>6 <30	<10	>10 <50	>50 <120	>120 <400	400<
f(fine)	±0,05	±0,05	±0,1	±0,15	±0,2	±0,3	±0,5	-	±0,2	±0,5	±1	±1°	±0°30'	±0°20'	±0°10'	±0°5'
m(coarse)	±0,1	±0,1	±0,2	±0,3	±0,5	±0,8	±1,2	±2								

*Without tolerance indication, LINEAR and ANGULAR DIMENSIONS for DIN 2768-T1 Class:m/f FORM and POSITION TOLERANCES are according DIN 2768-T2 Class:m/f Standards.
**Indication: Machining Parts f Class / Constructive Parts m Class.

Size A4

	Name	Sign	Date
Created	F.M.KILIÇASLAN		04/05/26
Checked	N.ESEN		04/05/26
Approved	F.ÖZKAYA		04/05/26

Weight: Net: - Gross: -
Quantity: 1
Material: -
Surface Treatment: -
Sheet: 1-1
Product Name: VL-BAR Compact Bar Light
Scale: 1:1
Product Number: VL-BAR-23-XXX-X-24-30
Projection

Copyright reserved. Do not scale on this drawing

FÖGE ELEKTRONIK GmbH