Copyright@ FÖGE ELEKTRONIK GmbH, 2015, all rights reserved. This drawing is the property of FÖGE ELEKTRONIK GmbH and may not be reproduced in my from, either in whole or in part, or made available to any third party or used for manufacturing or any other purpose without the prior written permission of FÖGE ELEKTRONIK GmbH.

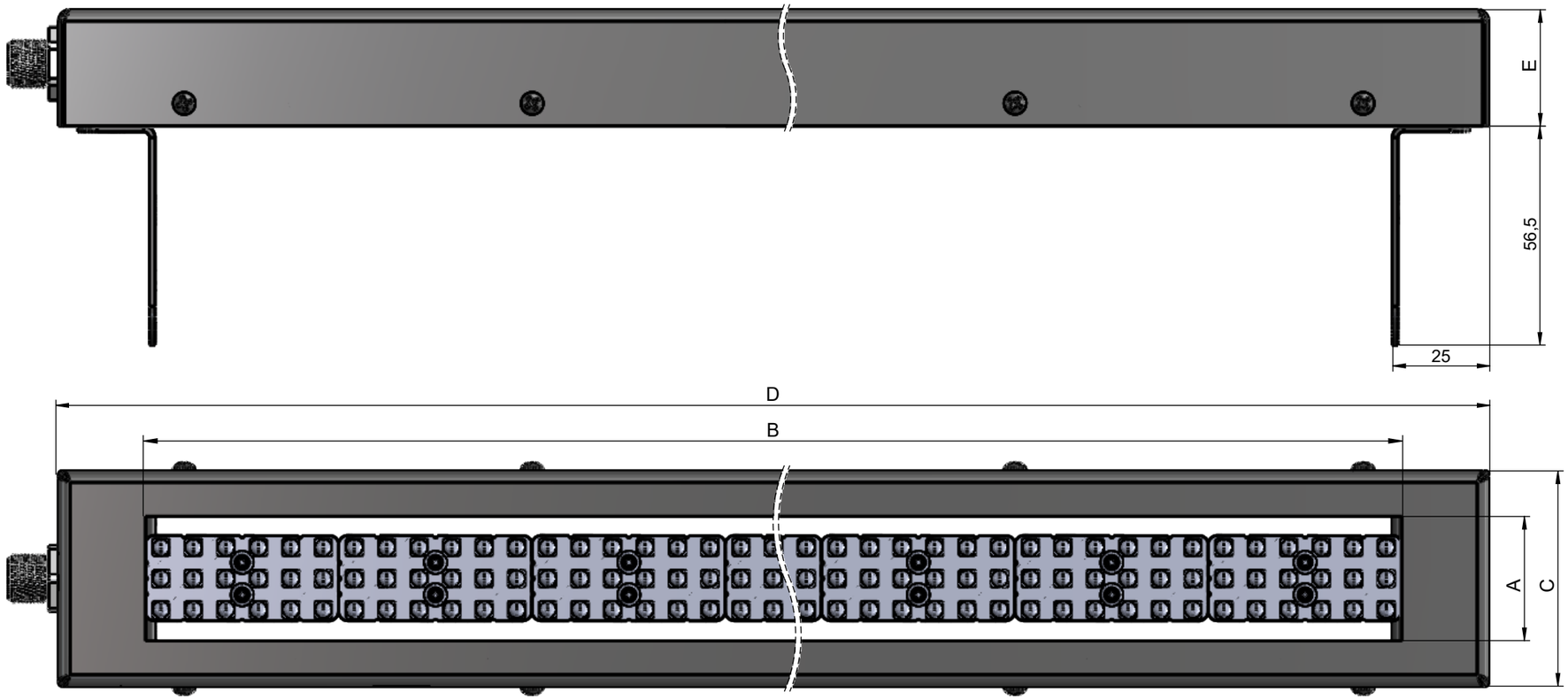

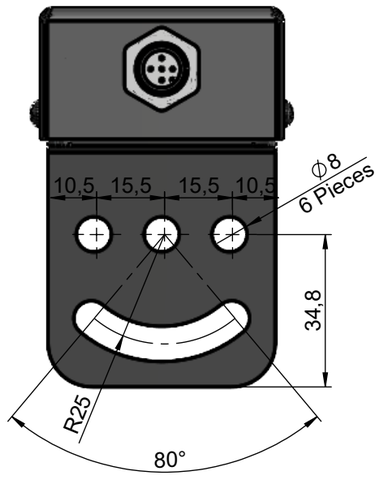

Model	A(mm)	B(mm)	C(mm)	D(mm)	E(mm)
VL-BAL-25-400-X-24-30	32	400	55,5	445	30
VL-BAL-25-500-X-24-30	32	500	55,5	545	30
VL-BAL-25-600-X-24-30	32	600	55,5	645	30
VL-BAL-25-700-X-24-30	32	700	55,5	745	30
VL-BAL-25-800-X-24-30	32	800	55,5	845	30
VL-BAL-25-900-X-24-30	32	900	55,5	945	30
VL-BAL-25-1000-X-24-30	32	1000	55,5	1045	30
VL-BAL-25-1100-X-24-30	32	1100	55,5	1145	30
VL-BAL-25-1300-X-24-30	32	1300	55,5	1345	30
VL-BAL-25-1500-X-24-30	32	1500	55,5	1545	30
VL-BAL-25-1700-X-24-30	32	1700	55,5	1745	30
VL-BAL-25-2000-X-24-30	32	2000	55,5	2045	30
VL-BAL-25-2500-X-24-30	32	2500	55,5	2545	30

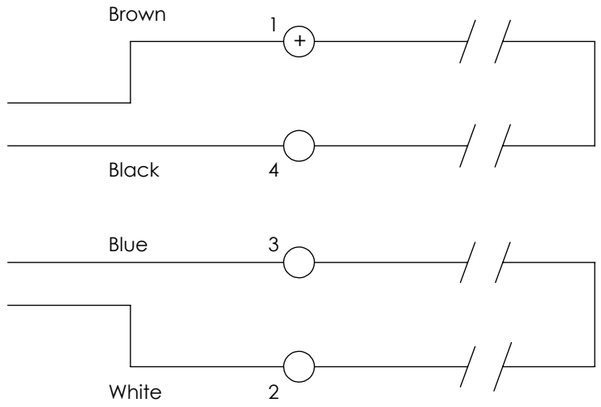

Pins	*Function*	*Wire Color*
1	Power In +24 VDC	Brown
2	NPN	White
3	GND	Blue
4	PNP	Black

Rev. Nm.	Rev. Date	Description	Checked	Approved
4				
3				
2				
1				

DIN ISO 2768	Linear Dimensios								Radius, Chamfer Dimensions			Angular Dimensions				
Tolerance Class	>0,5 <3	>3 <6	>6 <30	>30 <120	>120 <400	>400 <1000	>1000 <2000	>2000 <4000	>0,5 <3	>3 <6	>6 <30	<10	>10 <50	>50 <120	>120 <400	400<
f(fine)	±0,05	±0,05	±0,1	±0,15	±0,2	±0,3	±0,5	-	±0,2	±0,5	±1	±1°	±0°30'	±0°20'	±0°10'	±0°5'
m(coarse)	±0,1	±0,1	±0,2	±0,3	±0,5	±0,8	±1,2	±2								

*Without tolerance indication, LINEAR and ANGULAR DIMENSIONS for DIN 2768-T1 Class:m/f FORM and POSITION TOLERANCES are according DIN 2768-T2 Class:m/f Standards.
**Indication: Machining Parts f Class / Constructive Parts m Class.

Size A4

	Name	Sign	Date
Created	*Y.S.SEZER*		*13.06.2023*
Checked	*N.ESEN*		*13.06.2023*
Approved	*N.ESEN*		*13.06.2023*

Weight: Net: - Gross: -
Quantity: *1*
Material: -
Surface Treatment: -
Sheet: *1-1*
Scale: *1:1*
Projection
Product Name: *VL-BAL Long Bar Light*
Product Number: *VL-BAL-25-XXXX-X-24-C30*

Copyright reserved. Do not scale on this drawing

FÖGE ELEKTRONIK GmbH