VL-TNL Tunnel Light

Tunnel light for diffuse illumination of shiny parts, round opening (VL-TNA) or slot (VL-TNL), up to 1000 mm, 24 V DC



KEY DATA

Light type
Tunnel light for diffuse illumination; built with VL-BAL bar lights inside

Colours and wavelength
Red 625 nm · White 6500 K

Sizes (A × B)
VL-TNA and VL-TNL 200 – 400 × 250 / 500 / 750 / 1000 mm

Supply voltage
24 V DC

Overview

The VL-TNL tunnel light gives diffuse, even light for shiny parts and large areas, for example solar panel inspection, shiny surface inspection and mark reading on reflective labels. The part passes under the half-round cover while the camera looks through the opening on top.

Key features

- Diffuse light for shiny parts and narrow spaces
- VL-TNA with round camera opening, VL-TNL with camera slot
- Lengths up to 1000 mm
- VL-BAL bar lights built in — connection and trigger as VL-BAL
- Red 625 nm or white 6500 K; IR 850 nm and UV 365 nm on request
- 24 V DC, IP50 (IP67 on request)

Technical specifications

Light type	Tunnel light for diffuse illumination; built with VL-BAL bar lights inside
Versions	VL-TNA with round camera opening · VL-TNL with camera slot
Sizes (A × B)	VL-TNA and VL-TNL 200 – 400 × 250 / 500 / 750 / 1000 mm
Colours and wavelength	Red 625 nm · White 6500 K
Infrared and UV	IR 850 nm and UV 365 nm on request
Light angle	120°
Supply voltage	24 V DC
Power consumption	13 – 80 W depending on size and colour (see model table)
Electrical connection	As VL-BAL: M12 connector on the internal VL-BAL bar light, PNP or NPN trigger
Degree of protection	IP50 (IP67 on request)
Housing	Aluminium, black anodised, and steel, white painted
EMC	2014/30/EU — EMC Directive (EN IEC 55015:2019+A11:2020, IEC 61547:2020)

Models and ordering codes

Model	Version	Colour	Wavelength / colour temperature	Power	A × B	C	D	E
VL-TNA-200-250-R-24-C30	Round opening	Red	625 nm	13 W	200 × 250 mm	320 mm	307 mm	147 mm
VL-TNA-200-250-W-24-C30	Round opening	White	6500 K	20 W	200 × 250 mm	320 mm	307 mm	147 mm
VL-TNA-200-500-R-24-C30	Round opening	Red	625 nm	26 W	200 × 500 mm	320 mm	557 mm	147 mm
VL-TNA-200-500-W-24-C30	Round opening	White	6500 K	40 W	200 × 500 mm	320 mm	557 mm	147 mm
VL-TNA-200-750-R-24-C30	Round opening	Red	625 nm	39 W	200 × 750 mm	320 mm	807 mm	147 mm
VL-TNA-200-750-W-24-C30	Round opening	White	6500 K	60 W	200 × 750 mm	320 mm	807 mm	147 mm
VL-TNA-200-1000-R-24-C30	Round opening	Red	625 nm	52 W	200 × 1000 mm	320 mm	1057 mm	147 mm
VL-TNA-200-1000-W-24-C30	Round opening	White	6500 K	80 W	200 × 1000 mm	320 mm	1057 mm	147 mm
VL-TNA-300-250-R-24-C30	Round opening	Red	625 nm	13 W	300 × 250 mm	420 mm	307 mm	197 mm
VL-TNA-300-250-W-24-C30	Round opening	White	6500 K	20 W	300 × 250 mm	420 mm	307 mm	197 mm
VL-TNA-300-500-R-24-C30	Round opening	Red	625 nm	26 W	300 × 500 mm	420 mm	557 mm	197 mm
VL-TNA-300-500-W-24-C30	Round opening	White	6500 K	40 W	300 × 500 mm	420 mm	557 mm	197 mm
VL-TNA-300-750-R-24-C30	Round opening	Red	625 nm	39 W	300 × 750 mm	420 mm	807 mm	197 mm
VL-TNA-300-750-W-24-C30	Round opening	White	6500 K	60 W	300 × 750 mm	420 mm	807 mm	197 mm
VL-TNA-300-1000-R-24-C30	Round opening	Red	625 nm	52 W	300 × 1000 mm	420 mm	1057 mm	197 mm
VL-TNA-300-1000-W-24-C30	Round opening	White	6500 K	80 W	300 × 1000 mm	420 mm	1057 mm	197 mm
VL-TNA-400-250-R-24-C30	Round opening	Red	625 nm	13 W	400 × 250 mm	520 mm	307 mm	247 mm
VL-TNA-400-250-W-24-C30	Round opening	White	6500 K	20 W	400 × 250 mm	520 mm	307 mm	247 mm
VL-TNA-400-500-R-24-C30	Round opening	Red	625 nm	26 W	400 × 500 mm	520 mm	557 mm	247 mm
VL-TNA-400-500-W-24-C30	Round opening	White	6500 K	40 W	400 × 500 mm	520 mm	557 mm	247 mm
VL-TNA-400-750-R-24-C30	Round opening	Red	625 nm	39 W	400 × 750 mm	520 mm	807 mm	247 mm
VL-TNA-400-750-W-24-C30	Round opening	White	6500 K	60 W	400 × 750 mm	520 mm	807 mm	247 mm
VL-TNA-400-1000-R-24-C30	Round opening	Red	625 nm	52 W	400 × 1000 mm	520 mm	1057 mm	247 mm
VL-TNA-400-1000-W-24-C30	Round opening	White	6500 K	80 W	400 × 1000 mm	520 mm	1057 mm	247 mm
VL-TNL-200-250-R-24-C30	Slot	Red	625 nm	13 W	200 × 250 mm	320 mm	307 mm	147 mm
VL-TNL-200-250-W-24-C30	Slot	White	6500 K	20 W	200 × 250 mm	320 mm	307 mm	147 mm
VL-TNL-200-500-R-24-C30	Slot	Red	625 nm	26 W	200 × 500 mm	320 mm	557 mm	147 mm
VL-TNL-200-500-W-24-C30	Slot	White	6500 K	40 W	200 × 500 mm	320 mm	557 mm	147 mm
VL-TNL-200-750-R-24-C30	Slot	Red	625 nm	39 W	200 × 750 mm	320 mm	807 mm	147 mm
VL-TNL-200-750-W-24-C30	Slot	White	6500 K	60 W	200 × 750 mm	320 mm	807 mm	147 mm
VL-TNL-200-1000-R-24-C30	Slot	Red	625 nm	52 W	200 × 1000 mm	320 mm	1057 mm	147 mm
VL-TNL-200-1000-W-24-C30	Slot	White	6500 K	80 W	200 × 1000 mm	320 mm	1057 mm	147 mm
VL-TNL-300-250-R-24-C30	Slot	Red	625 nm	13 W	300 × 250 mm	420 mm	307 mm	197 mm
VL-TNL-300-250-W-24-C30	Slot	White	6500 K	20 W	300 × 250 mm	420 mm	307 mm	197 mm
VL-TNL-300-500-R-24-C30	Slot	Red	625 nm	26 W	300 × 500 mm	420 mm	557 mm	197 mm
VL-TNL-300-500-W-24-C30	Slot	White	6500 K	40 W	300 × 500 mm	420 mm	557 mm	197 mm
VL-TNL-300-750-R-24-C30	Slot	Red	625 nm	39 W	300 × 750 mm	420 mm	807 mm	197 mm
VL-TNL-300-750-W-24-C30	Slot	White	6500 K	60 W	300 × 750 mm	420 mm	807 mm	197 mm
VL-TNL-300-1000-R-24-C30	Slot	Red	625 nm	52 W	300 × 1000 mm	420 mm	1057 mm	197 mm
VL-TNL-300-1000-W-24-C30	Slot	White	6500 K	80 W	300 × 1000 mm	420 mm	1057 mm	197 mm
VL-TNL-400-250-R-24-C30	Slot	Red	625 nm	13 W	400 × 250 mm	520 mm	307 mm	247 mm
VL-TNL-400-250-W-24-C30	Slot	White	6500 K	20 W	400 × 250 mm	520 mm	307 mm	247 mm
VL-TNL-400-500-R-24-C30	Slot	Red	625 nm	26 W	400 × 500 mm	520 mm	557 mm	247 mm

Model	Version	Colour	Wavelength / colour temperature	Power	A × B	C	D	E
VL-TNL-400-500-W-24-C30	Slot	White	6500 K	40 W	400 × 500 mm	520 mm	557 mm	247 mm
VL-TNL-400-750-R-24-C30	Slot	Red	625 nm	39 W	400 × 750 mm	520 mm	807 mm	247 mm
VL-TNL-400-750-W-24-C30	Slot	White	6500 K	60 W	400 × 750 mm	520 mm	807 mm	247 mm
VL-TNL-400-1000-R-24-C30	Slot	Red	625 nm	52 W	400 × 1000 mm	520 mm	1057 mm	247 mm
VL-TNL-400-1000-W-24-C30	Slot	White	6500 K	80 W	400 × 1000 mm	520 mm	1057 mm	247 mm

All models: 24 V DC, IP50 (IP67 on request); electrical connection as VL-BAL. IR (850 nm) and UV (365 nm) versions on request.

Electrical connection

The tunnel light is connected through the M12 connector of the VL-BAL bar light built into it; wiring and trigger as VL-BAL.

Pin	Function	Wire colour
1	Power in +24 V DC	Brown
2	NPN trigger	White
3	GND	Blue
4	PNP trigger	Black
5	Not connected	—

Apply either the PNP or the NPN trigger signal, not both. Without the correct input current the light output is not consistent. Pin 5 is not used.

Sample applications

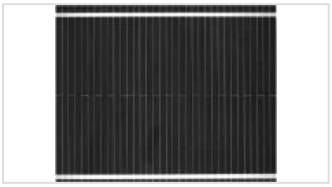

Solar panel inspection, large-area positioning

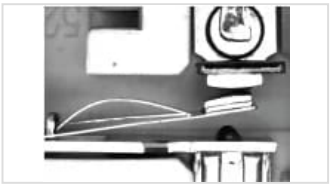

Shiny surface inspection

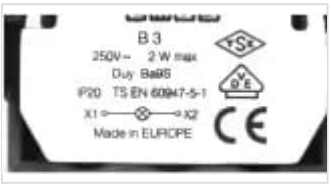

Part mark reading with diffuse lighting

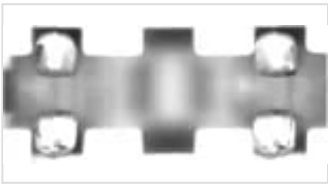

Shiny part positioning and inspection

Accessories

Ordering code	Description	Suitable for
VKPM-Z-5/4	M12 female connector, straight, 4-pin, PVC cable 4 × 0.34 mm², 5 m, open end, IP67	All VL-TNL / VL-TNA models

Dimensional drawing

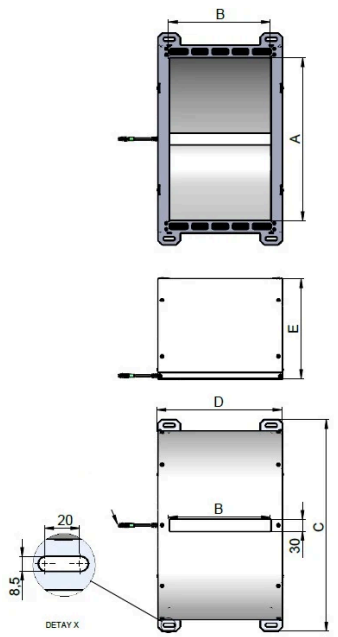

VL-TNL dimension sketch: dimensions A to E, camera slot 30 mm wide, mounting slots 20 × 8.5 mm

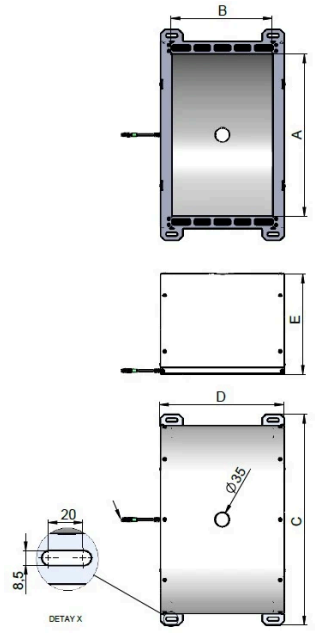

VL-TNA dimension sketch: dimensions A to E, round camera opening Ø 35 mm, mounting slots 20 × 8.5 mm

Product information and ordering: sales@fogegmbh.com · +49 9372 9809477 · www.fogegmbh.com