VL-RGF Direct Ring Light

Direct LED ring light, 3 sizes, red, green, blue or white, 24 V DC with PNP / NPN trigger



KEY DATA

Light type
Direct LED ring light
Colours and wavelength
Red 621 nm · Green 528 nm · Blue 470 nm · White 6500 K
Sizes
51-30, 70-38, 100-45 (see model table)
Supply voltage
24 V DC

Overview

The VL-RGF is a direct LED ring light that is mounted around the camera lens. It suits OCR and DataMatrix reading on metal parts, hole and defect detection, completeness checks, picking and concentricity measurement.

Key features

- High-power clear LEDs for maximum light and working range
- Automotive-grade LEDs with constant-current drive
- 3 mm LEDs for diffuse illumination
- Maximum LED density for high light intensity
- Cooling grooves and thermal film for a long service life
- Red 621 nm, green 528 nm, blue 470 nm or white 6500 K; IR 850 nm and UV 365 nm on request
- PNP and NPN trigger input
- 24 V DC, M8 4-pin connector, IP50 (IP67 on request)

Technical specifications

Light type	Direct LED ring light
Sizes	51-30, 70-38, 100-45 (see model table)
Colours and wavelength	Red 621 nm · Green 528 nm · Blue 470 nm · White 6500 K
Infrared and UV	IR 850 nm and UV 365 nm on request
LED beam angle	Red 32° · Green 34° · Blue 34° · White 30°
LEDs	Automotive-grade LEDs, constant-current drive
Supply voltage	24 V DC
Power consumption	1.7 – 12 W depending on size and colour (see model table)
Trigger input	PNP or NPN — apply one signal, not both
Connection	M8 4-pin connector on a 300 mm cable
Degree of protection	IP50 (IP67 on request)
Housing	Aluminium, black anodised, with cooling grooves

Mounting	4 × M3 mounting holes
EMC	2014/30/EU — EMC Directive (EN IEC 55015:2019+A11:2020, IEC 61547:2020)

Models and ordering codes

Model	Colour	Wavelength / colour temperature	Power	A	B	C
VL-RGF-51-30-R-24-C30	Red	621 nm	1.7 W	56.5 mm	26.5 mm	19 mm
VL-RGF-51-30-G-24-C30	Green	528 nm	2.7 W	56.5 mm	26.5 mm	19 mm
VL-RGF-51-30-B-24-C30	Blue	470 nm	2.7 W	56.5 mm	26.5 mm	19 mm
VL-RGF-51-30-W-24-C30	White	6500 K	2.7 W	56.5 mm	26.5 mm	19 mm
VL-RGF-70-38-R-24-C30	Red	621 nm	3.4 W	75 mm	34.5 mm	19 mm
VL-RGF-70-38-G-24-C30	Green	528 nm	5 W	75 mm	34.5 mm	19 mm
VL-RGF-70-38-B-24-C30	Blue	470 nm	5 W	75 mm	34.5 mm	19 mm
VL-RGF-70-38-W-24-C30	White	6500 K	5 W	75 mm	34.5 mm	19 mm
VL-RGF-100-45-R-24-C30	Red	621 nm	8 W	105.5 mm	41 mm	19 mm
VL-RGF-100-45-G-24-C30	Green	528 nm	12 W	105.5 mm	41 mm	19 mm
VL-RGF-100-45-B-24-C30	Blue	470 nm	12 W	105.5 mm	41 mm	19 mm
VL-RGF-100-45-W-24-C30	White	6500 K	12 W	105.5 mm	41 mm	19 mm

All models: 24 V DC, M8 4-pin connector on a 300 mm cable, IP50 (IP67 on request). IR (850 nm) and UV (365 nm) versions on request.

Electrical connection

M8 4-pin connector on a 300 mm cable. The light is switched by a PNP or an NPN trigger signal.

Pin	Function	Wire colour
1	Power in +24 V DC	Brown
2	NPN trigger	White
3	GND	Blue
4	PNP trigger	Black

Apply either the PNP or the NPN trigger signal, not both. Without the correct input current the light output is not consistent.

Sample applications

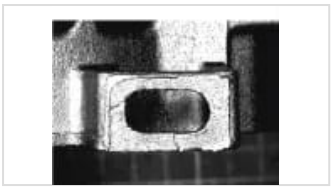

Positioning, part defect detection, part checking



OCR on moulded metal parts, aluminium defect detection



OCR, DataMatrix on laser/inkjet-marked metal

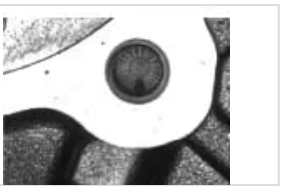

Hole and defect detection on machined metal



Missing part detection in box, positioning



Metal part completeness check



Picking, angle/position detection, part identification



Concentricity measurement



ID reading on dot-peen marked metal



ID reading on laser-printed metal

Accessories

Ordering code	Description	Suitable for
TKPM-Z-2.5/4	M8 female connector, straight, PVC cable 4 × 0.25 mm², black, UL/CSA, 2.5 m	All VL-RGF models
TKPM-Z-5/4	M8 female connector, straight, PVC cable 4 × 0.25 mm², black, UL/CSA, 5 m	All VL-RGF models
TKPM-W-2.5/4	M8 female connector, 90°, PVC cable 4 × 0.25 mm², black, UL/CSA, 2.5 m	All VL-RGF models
TKPM-W-5/4	M8 female connector, 90°, PVC cable 4 × 0.25 mm², black, UL/CSA, 5 m	All VL-RGF models

Dimensional drawing

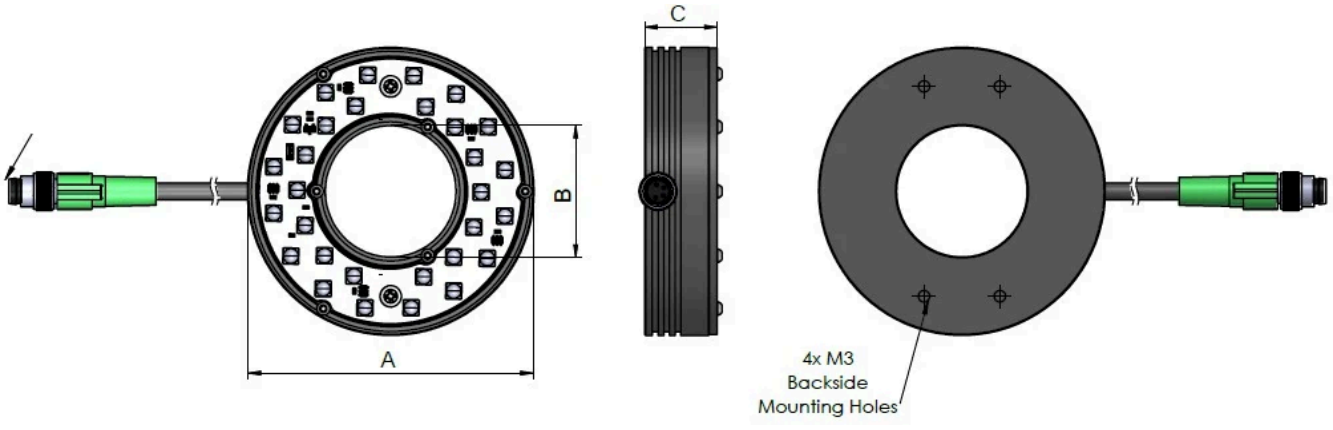

VL-RGF dimension sketch: outer diameter A, inner diameter B, height C, 4 × M3 rear mounting holes and M8 connector

Product information and ordering: sales@fogegmbh.com · +49 9372 9809477 · www.fogegmbh.com