VL-FLD Large Area Flat Dome Light

White flat dome light with camera hole, 300 × 300 to 1000 × 1000 mm, 24 V DC

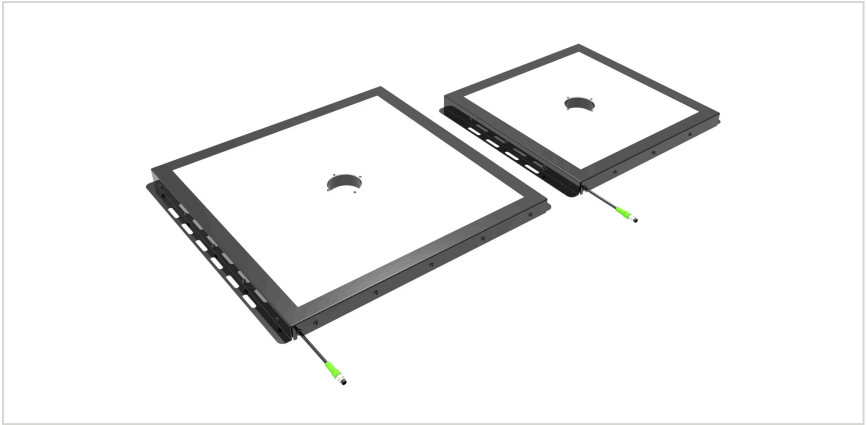

KEY DATA

Light type
Large-area flat dome light with camera hole

Colour
White 6500 K

Sizes (A × B)
300 × 300 to 1000 × 1000 mm in 100 mm steps

Supply voltage
24 V DC

Overview

The VL-FLD is a large-area flat dome light. The camera looks through a hole in the middle of the diffuse light surface, which gives a dome effect on large, flat objects — for colour differentiation, position detection and contamination checks over wide areas.

Key features

- Diffuse light with camera hole for a dome effect
- Sizes from 300 × 300 to 1000 × 1000 mm
- Hole position and design changeable on request
- Polycarbonate diffuser with high light transmission
- White 6500 K; IR 850 nm and UV 365 nm on request
- 24 V DC, M8 4-pin connector, IP50 (IP67 on request)

Technical specifications

Light type	Large-area flat dome light with camera hole
Sizes (A × B)	300 × 300 to 1000 × 1000 mm in 100 mm steps
Camera hole	Ø 55 mm (300 and 400 mm) · Ø 78 mm (500 to 1000 mm); position and design on request
Colour	White 6500 K
Infrared and UV	IR 850 nm and UV 365 nm on request
Light angle	180°
Supply voltage	24 V DC
Power consumption	24 – 100 W depending on size (see model table)
Trigger input	None — the light is switched with the supply voltage
Connection	M8 4-pin connector on a 300 mm cable
Degree of protection	IP50 (IP67 on request)
Housing	Steel, black painted
Diffuser	Polycarbonate with high light transmission

Thickness (E)	21 mm
EMC	2014/30/EU — EMC Directive (EN IEC 55015:2019+A11:2020, IEC 61547:2020)

Models and ordering codes

Model	Colour	Size A × B	Outer dimensions C × D	Camera hole	Power
VL-FLD-300-300-W-24-C30	White 6500 K	300 × 300 mm	352 × 385 mm	Ø 55 mm	24 W
VL-FLD-400-400-W-24-C30	White 6500 K	400 × 400 mm	452 × 485 mm	Ø 55 mm	34 W
VL-FLD-500-500-W-24-C30	White 6500 K	500 × 500 mm	552 × 585 mm	Ø 78 mm	43 W
VL-FLD-600-600-W-24-C30	White 6500 K	600 × 600 mm	652 × 685 mm	Ø 78 mm	50 W
VL-FLD-700-700-W-24-C30	White 6500 K	700 × 700 mm	752 × 785 mm	Ø 78 mm	70 W
VL-FLD-800-800-W-24-C30	White 6500 K	800 × 800 mm	852 × 885 mm	Ø 78 mm	80 W
VL-FLD-900-900-W-24-C30	White 6500 K	900 × 900 mm	952 × 985 mm	Ø 78 mm	90 W
VL-FLD-1000-1000-W-24-C30	White 6500 K	1000 × 1000 mm	1052 × 1085 mm	Ø 78 mm	100 W

All models: 24 V DC, M8 4-pin connector on a 300 mm cable, IP50 (IP67 on request), 21 mm thick. Hole position and design on request. IR (850 nm) and UV (365 nm) versions on request.

Electrical connection

M8 4-pin connector on a 300 mm cable. Only pins 1 (+24 V DC) and 3 (GND) are used.

Pin	Function	Wire colour
1	Power in +24 V DC	Brown
2	Not connected	White
3	GND	Blue
4	Not connected	Black

The light has no trigger input; it is switched on with the 24 V DC supply.

Sample applications



Colour differentiation and classification on large objects



Wide-area position detection, surface inspection



Wide-area contamination detection

Accessories

Ordering code	Description	Suitable for
TKPM-Z-5/4	M8 female connector, straight, 4-pin, PVC cable 4 × 0.25 mm², 5 m, open end, IP67	All VL-FLD models

Dimensional drawing

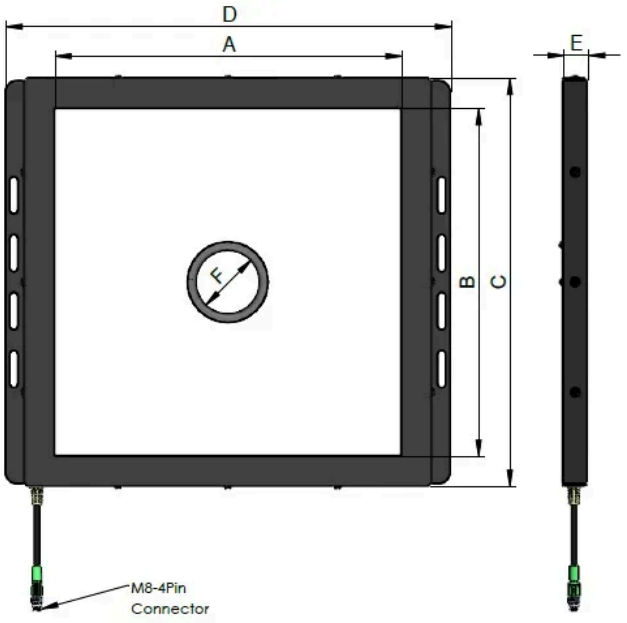

VL-FLD dimension sketch with light area A × B, outer dimensions C × D, thickness E, camera hole F and M8 4-pin connector

Product information and ordering: sales@fogegmbh.com · +49 9372 9809477 · www.fogegmbh.com