VL-BLL Bar Backlight for Line Scan

LED bar backlight for line-scan cameras, 400 to 1000 mm, up to 2500 mm on request, 24 V DC

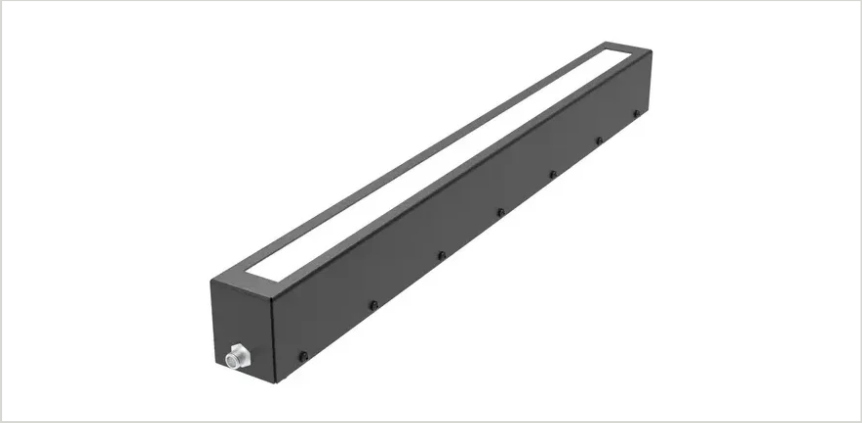

KEY DATA

Light type
LED bar backlight for line-scan cameras

Colours and wavelength
Red 625 nm · White 6500 K

Light lengths (B)
400 – 1000 mm in 100 mm steps; up to 2500 mm on request

Supply voltage
24 V DC

Overview

The VL-BLL is a long LED bar backlight for line-scan cameras. It lights the scan line from behind the material and suits web, non-woven and large-area inspection as well as counting and positioning on wide conveyors.

Key features

- Lengths 400 – 1000 mm, up to 2500 mm on request
- High power for long-range applications with low power consumption
- Red 625 nm or white 6500 K; IR 850 nm and UV 365 nm on request
- PNP and NPN trigger input
- Robust steel housing
- 24 V DC, M12 5-pin connector on the housing, IP50

Technical specifications

Light type	LED bar backlight for line-scan cameras
Light lengths (B)	400 – 1000 mm in 100 mm steps; up to 2500 mm on request
Profile (A × C)	32 × 55.5 mm
Colours and wavelength	Red 625 nm · White 6500 K
Infrared and UV	IR 850 nm and UV 365 nm on request
Light angle	30°
Supply voltage	24 V DC
Power consumption	11 – 40 W depending on length and colour (see model table)
Trigger input	PNP or NPN — apply one signal, not both
Connection	M12 5-pin connector on the housing (no cable, ordering code ending -C)
Degree of protection	IP50
Housing	Steel, black painted
EMC	2014/30/EU — EMC Directive (EN IEC 55015:2019+A11:2020, IEC 61547:2020)

Models and ordering codes

Model	Colour	Wavelength / colour temperature	Power	Light length B	Total length D
VL-BLL-25-400-R-24-C	Red	625 nm	11 W	400 mm	445 mm
VL-BLL-25-400-W-24-C	White	6500 K	16 W	400 mm	445 mm
VL-BLL-25-500-R-24-C	Red	625 nm	14 W	500 mm	545 mm
VL-BLL-25-500-W-24-C	White	6500 K	20 W	500 mm	545 mm
VL-BLL-25-600-R-24-C	Red	625 nm	16 W	600 mm	645 mm
VL-BLL-25-600-W-24-C	White	6500 K	24 W	600 mm	645 mm
VL-BLL-25-700-R-24-C	Red	625 nm	19 W	700 mm	745 mm
VL-BLL-25-700-W-24-C	White	6500 K	28 W	700 mm	745 mm
VL-BLL-25-800-R-24-C	Red	625 nm	22 W	800 mm	845 mm
VL-BLL-25-800-W-24-C	White	6500 K	32 W	800 mm	845 mm
VL-BLL-25-900-R-24-C	Red	625 nm	24 W	900 mm	945 mm
VL-BLL-25-900-W-24-C	White	6500 K	36 W	900 mm	945 mm
VL-BLL-25-1000-R-24-C	Red	625 nm	27 W	1000 mm	1045 mm
VL-BLL-25-1000-W-24-C	White	6500 K	40 W	1000 mm	1045 mm

All models: 24 V DC, M12 5-pin connector on the housing (no cable), IP50. Lengths up to 2500 mm on request. IR (850 nm) and UV (365 nm) versions on request.

Electrical connection

M12 5-pin connector on the housing (no cable). The light is switched by a PNP or an NPN trigger signal.

Pin	Function	Wire colour
1	Power in +24 V DC	Brown
2	NPN trigger	White
3	GND	Blue
4	PNP trigger	Black
5	Not connected	—

Apply either the PNP or the NPN trigger signal, not both. Without the correct input current the light output is not consistent. Pin 5 is not used; the 4-pin cable VKPM-Z-5/4 fits.

Sample applications

- Backlit defect inspection of web materials with line-scan cameras
- Non-woven and large-area inspection
- Counting and positioning on wide conveyors

Accessories

Ordering code	Description	Suitable for
VKPM-Z-5/4	M12 female connector, straight, 4-pin, PVC cable 4 × 0.34 mm², 5 m, open end, IP67	All VL-BLL models

Dimensional drawing

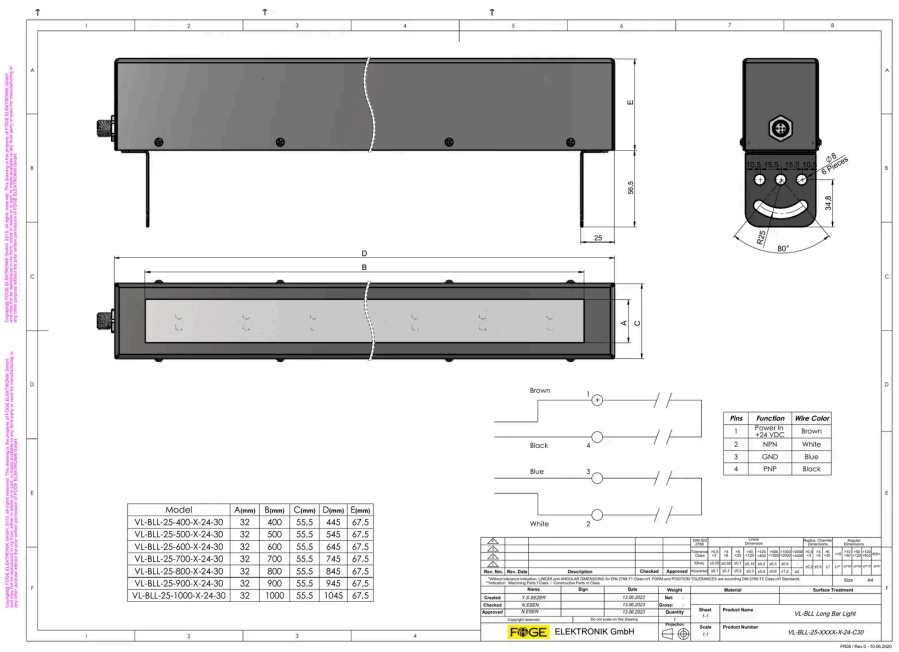

Model	A(mm)	B(mm)	C(mm)	D(mm)	E(mm)
VL-BLL-25-400-X-24-30	32	400	55.5	445	67.5
VL-BLL-25-500-X-24-30	32	500	55.5	545	67.5
VL-BLL-25-600-X-24-30	32	600	55.5	645	67.5
VL-BLL-25-700-X-24-30	32	700	55.5	745	67.5
VL-BLL-25-800-X-24-30	32	800	55.5	845	67.5
VL-BLL-25-900-X-24-30	32	900	55.5	945	67.5
VL-BLL-25-1000-X-24-30	32	1000	55.5	1045	67.5

Pins	Function	Wire Color
1	Power in +24 VDC	Brown
2	NPN	White
3	GND	Blue
4	PNP	Black

VL-BLL dimensional drawing with dimensions A to E for 400 to 1000 mm, profile cross-section and pin assignment

Product information and ordering: sales@fogegmbh.com · +49 9372 9809477 · www.fogegmbh.com