VL-BLA Large Area Backlight

White LED backlight, 300 × 300 to 1000 × 1000 mm, 24 V DC, slim steel housing



KEY DATA

Light type
Large-area LED backlight
Colour
White 6500 K
Sizes (A × B)
300 × 300 to 1000 × 1000 mm in 100 mm steps
Supply voltage
24 V DC

Overview

The VL-BLA is a large-area LED backlight for machine vision. Placed behind the part, it creates a sharp silhouette for positioning, presence checks, web inspection and contamination detection on large objects.

Key features

- Sizes from 300 × 300 to 1000 × 1000 mm
- Diffuse large-area light in a slim design, 21 mm thick
- Complete metal case for harsh environments
- Polycarbonate diffuser with high light transmission
- White 6500 K; IR 850 nm and UV 365 nm on request
- 24 V DC, M8 4-pin connector, IP50 (IP67 on request)
- PNP and NPN trigger input

Technical specifications

Light type	Large-area LED backlight
Sizes (A × B)	300 × 300 to 1000 × 1000 mm in 100 mm steps
Colour	White 6500 K
Infrared and UV	IR 850 nm and UV 365 nm on request
Light angle	180°
Supply voltage	24 V DC
Power consumption	24 – 100 W depending on size (see model table)
Trigger input	PNP or NPN — apply one signal, not both
Connection	M8 4-pin connector on a 300 mm cable
Degree of protection	IP50 (IP67 on request)
Housing	Steel, black painted, fully enclosed metal case
Diffuser	Polycarbonate with high light transmission
Thickness (E)	21 mm

EMC	2014/30/EU — EMC Directive (EN IEC 55015:2019+A11:2020, IEC 61547:2020)

Models and ordering codes

Model	Colour	Size A × B	Outer dimensions C × D	Power
VL-BLA-300-300-W-24-C30	White 6500 K	300 × 300 mm	352 × 385 mm	24 W
VL-BLA-400-400-W-24-C30	White 6500 K	400 × 400 mm	452 × 485 mm	34 W
VL-BLA-500-500-W-24-C30	White 6500 K	500 × 500 mm	552 × 585 mm	43 W
VL-BLA-600-600-W-24-C30	White 6500 K	600 × 600 mm	652 × 685 mm	50 W
VL-BLA-700-700-W-24-C30	White 6500 K	700 × 700 mm	752 × 785 mm	70 W
VL-BLA-800-800-W-24-C30	White 6500 K	800 × 800 mm	852 × 885 mm	80 W
VL-BLA-900-900-W-24-C30	White 6500 K	900 × 900 mm	952 × 985 mm	90 W
VL-BLA-1000-1000-W-24-C30	White 6500 K	1000 × 1000 mm	1052 × 1085 mm	100 W

All models: 24 V DC, M8 4-pin connector on a 300 mm cable, IP50 (IP67 on request), 21 mm thick. IR (850 nm) and UV (365 nm) versions on request.

Electrical connection

M8 4-pin connector on a 300 mm cable. The light is switched by a PNP or an NPN trigger signal.

Pin	Function	Wire colour
1	Power in +24 V DC	Brown
2	NPN trigger	White
3	GND	Blue
4	PNP trigger	Black

Apply either the PNP or the NPN trigger signal, not both. Without the correct input current the light output is not consistent.

Sample applications

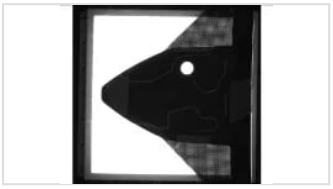

Positioning on windscreens for sensor mounting, position check

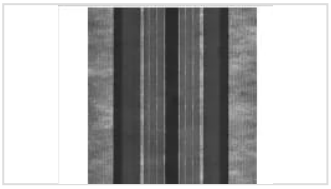

Web inspection, part inspection, part direction, contamination check on webs



Wide-area part inspection: pharmaceuticals, food, beverages



Web density check, contamination inspection

Accessories

Ordering code	Description	Suitable for
TKPM-Z-5/4	M8 female connector, straight, 4-pin, PVC cable 4 × 0.25 mm², 5 m, open end, IP67	All VL-BLA models

Dimensional drawing

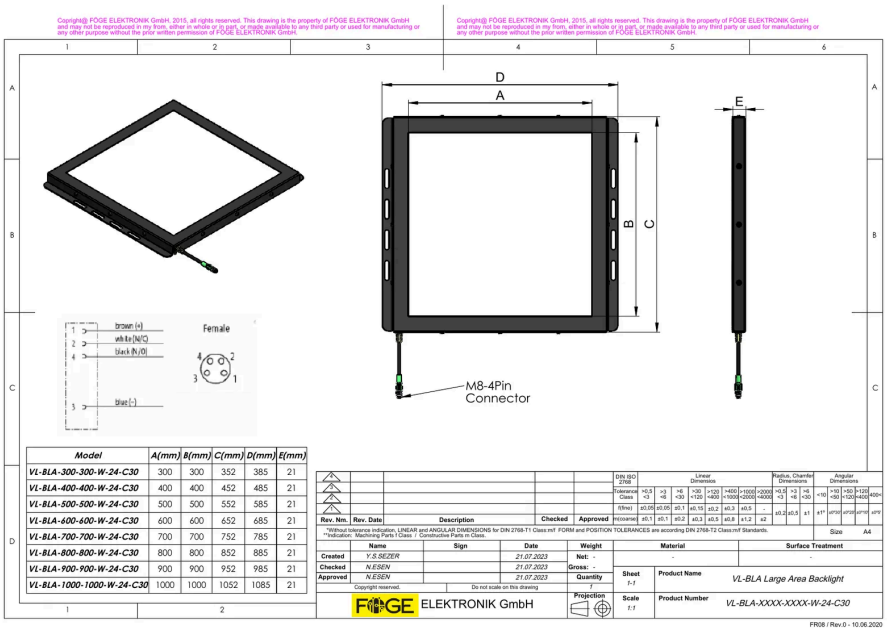

VL-BLA dimensional drawing with dimensions A to E for 300 to 1000 mm and M8 4-pin connector

Product information and ordering: sales@fogegmbh.com · +49 9372 9809477 · www.fogegmbh.com